A generic model for fuses to calculate the transients in low-voltage power networks

Prof. Dr.-Ing. Michael Igel; Marc Ames, M.Sc.
PowerEngs, University of Applied Sciences Saarbrücken, Saarland, michael.igel@htwsaar.de

Dipl.-Ing. Felix Glinka; Dipl.-Ing. Tilman Wippenbeck; Philipp Erlinghagen, M.Sc., M.Sc.
IFHT, RWTH Aachen University, Aachen, glinka@ifht.rwth-aachen.de

Supported by:

Federal Ministry
for Economic Affairs
and Energy

on the basis of a decision
by the German Bundestag

A generic model for fuses to calculate the transients in low-voltage power networks

- **Scope of ProFuDiS**
  The increase of decentralized energy resources leads to a lot of changes in electrical power networks and therefore also a lot of changes for the protection systems used in electrical LV- and MV-power networks.

  The ProFuDiS project has the objective to identify requirements and solutions for existing and future protection systems.

- **Cooperating partners of ProFuDiS**
  RWTH Aachen University; FGH e.V.; HTW des Saarlandes University; RWE Deutschland AG; SMA Solar Technology AG; Omicron electronics GmbH; NH/HH-Recycling e.V.; ABB AG; Schneider Electric GmbH; Siemens AG;

government-funded by

Supported by:
Federal Ministry for Economic Affairs and Energy
on the basis of a decision by the German Bundestag

A generic model for fuses to calculate the transients in low-voltage power networks

- **Introduction**
- **Impact of distributed generation in low-voltage power networks**
- **Generic software based models for fuses**
- **„Black Box"-Fuse model from the power network point of view**
  - **Based on the network calculation program ATPDesigner/ATP**
  - **Based on the network calculation program PowerFactory**
- **Short-Circuit tests in the IFHT 0,4kV-test center**
- **Validation of the software based models using the short-circuit tests**

A generic model for fuses to calculate the transients in low-voltage power networks

The Current Situation in LV-Power Networks

- **Fuses are mainly used to protect the equipment e.g. transformers, lines, etc.**
- **Only methods to calculate the steady-state are used to select the right fuse**
  - **Short-circuit calculation acc. to IEC 60909 (VDE 0102)**
- **Neither transients nor harmonics are considered**

The Impact of Inverter based Distributed Generator Systems (I-DG)

- **From the power network point of view: I-DG e.g. photovoltaic systems are current sources, not voltage sources**
- **I-DG have an increasing influence in case of a short-circuit (SC) regarding the behaviour of fuses**

A generic model for fuses to calculate the transients in low-voltage power networks

Distributed Systems in Radial Low-Voltage Power Networks

- **Without I-DG: 100% SC-Current flows from MV-network ➔ Fuses Fu1 and Fu2 ➔ to the SC-location**

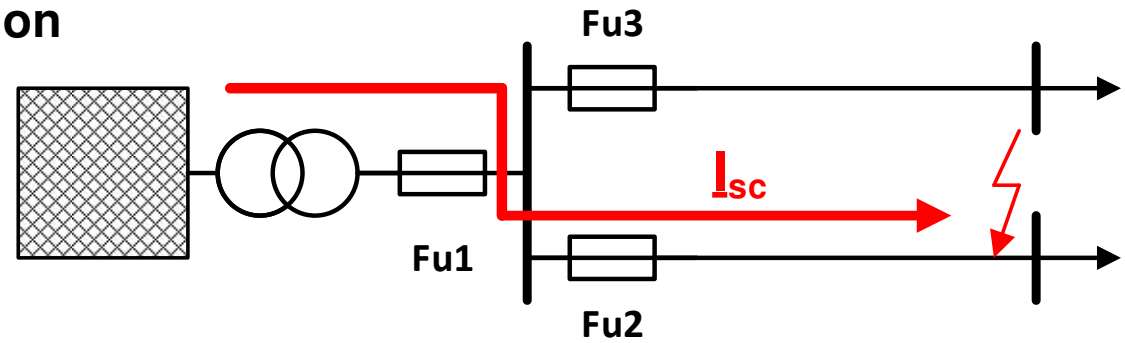

- **With I-DG: SC-Current flows ① from MV-network ➔ Fuses Fu1 and Fu2 ➔ the SC location AND ② from I-DG ➔ the SC-location**

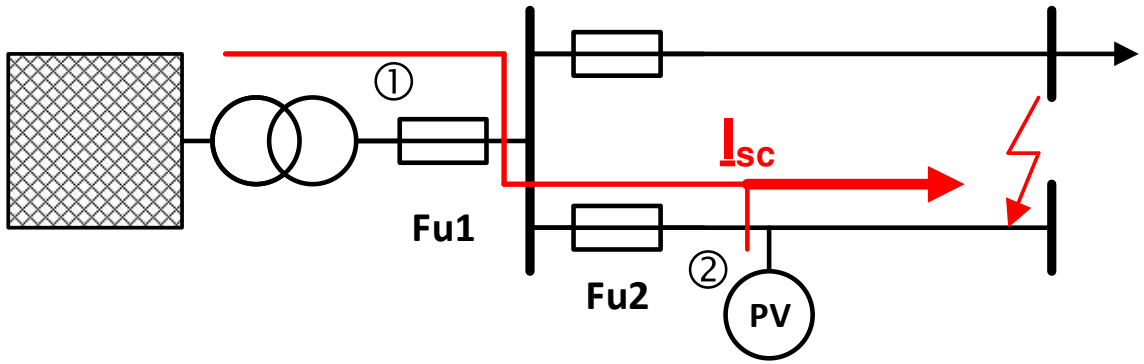

A generic model for fuses to calculate the transients in low-voltage power networks

Distributed Systems in Radial Low-Voltage Power Networks

- **With I-DG: SC-Current flows ① from MV-network ➔ Fuses Fu1 and Fu2 ➔ the SC-location AND ② from I-DG ➔ the SC-location**

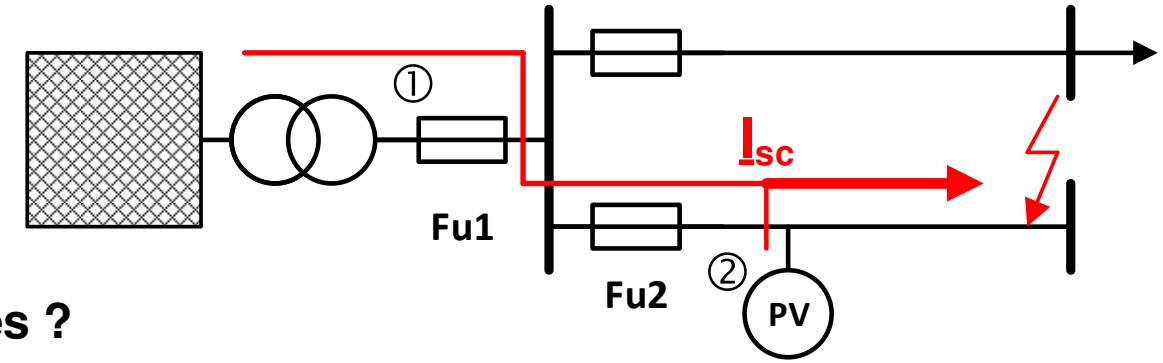

- **And the Consequences ?**
  - **SC-Current infeed of I-DG leads to a reduction of the SC-current at both fuse**
  - **The triping times of both fuses increase up to a non-tripping, so called blinding**

The behaviour of I-DG and fuses must be investigated from the power network point of view, steady-state and transient.

A generic model for fuses to calculate the transients in low-voltage power networks

Software based Model of a Fuse implemented in ATPDesigner/ATP

- **ATP is a worldwide used software to calculate transients in electrical power networks**
- **New user specific models e.g. of a fuse can be developed using the programming language MODELS**
- **What will be needed for the fuse model ?**
  - **⑦ : Switch to interrupt the SC-current**
  - **⑤: Resistance $R_{Arc}(t)$ to represent the arc**
  - **Software to implement the fuse model analyzing the time dependent phase-currents $i_{L123}(t)$**

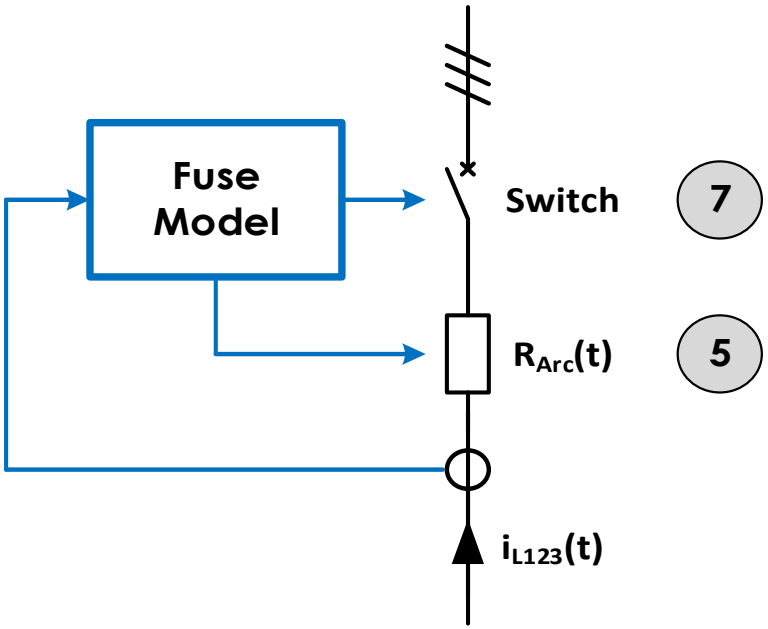

A generic model for fuses to calculate the transients in low-voltage power networks

Software based Model of a Fuse implemented in ATPDesigner/ATP

1. R.M.S. Calculation using a numerical integration
2. Current I> exceeded ?
3. Thermal energy calculation
4. I^2t-melting energy exceeded ?
5. Starting the arc model
6. Arc resistance small enough ?
7. Interrupting SC-current

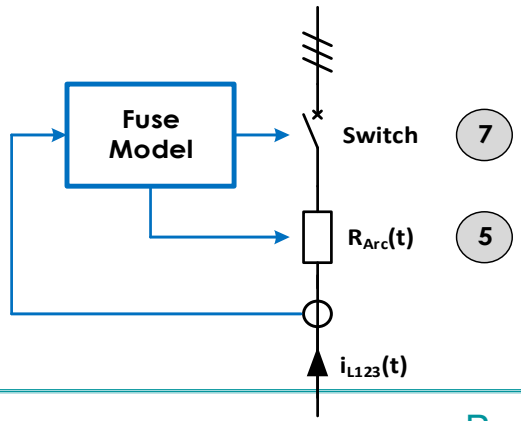

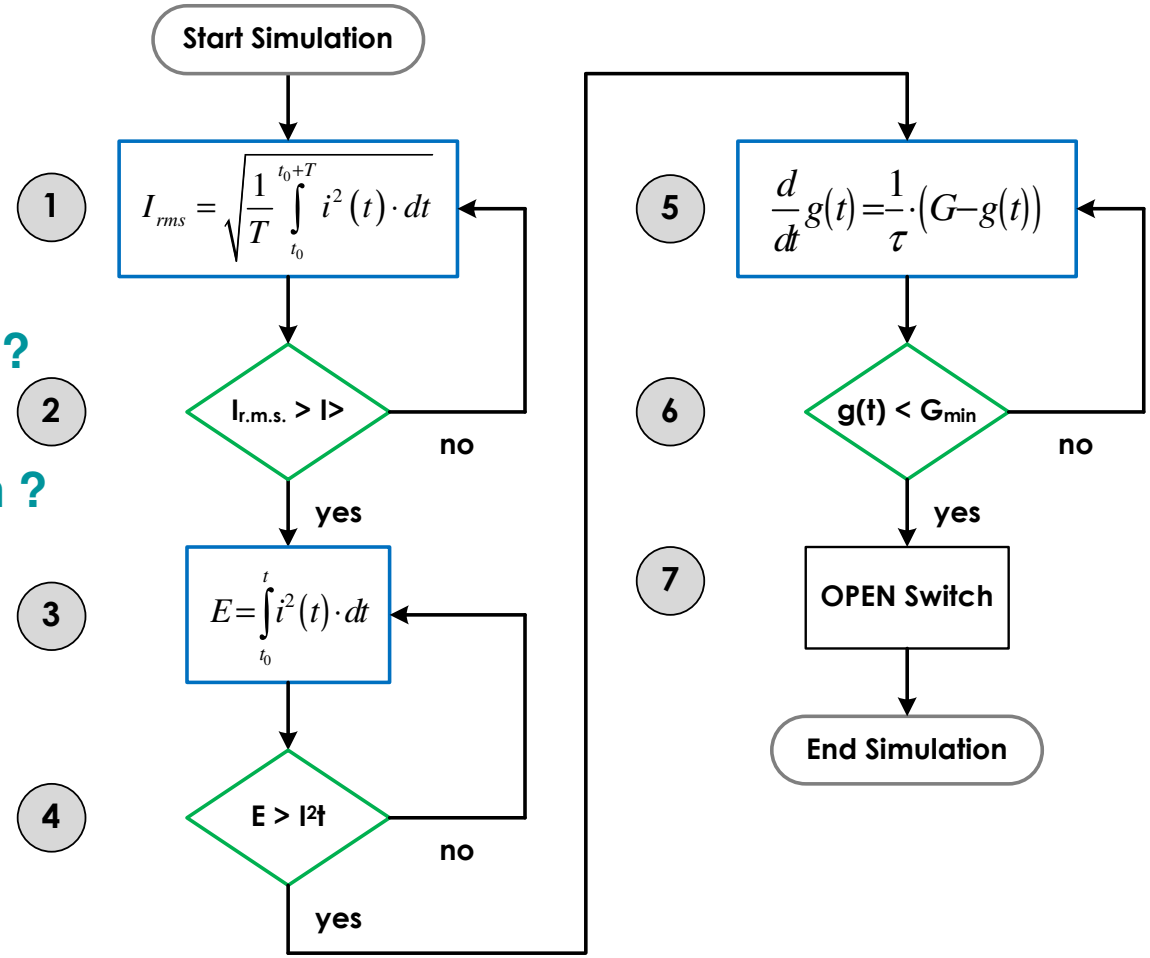

A generic model for fuses to calculate the transients in low-voltage power networks

Calculation of the Melting Current only using Software

- **Each phase-current sampled with Δt = 100µs ➔ N = 200 samples per cycle**
- **Calculation of r.m.s. value using a high-accuracy integration method**

All frequency and DC components considered

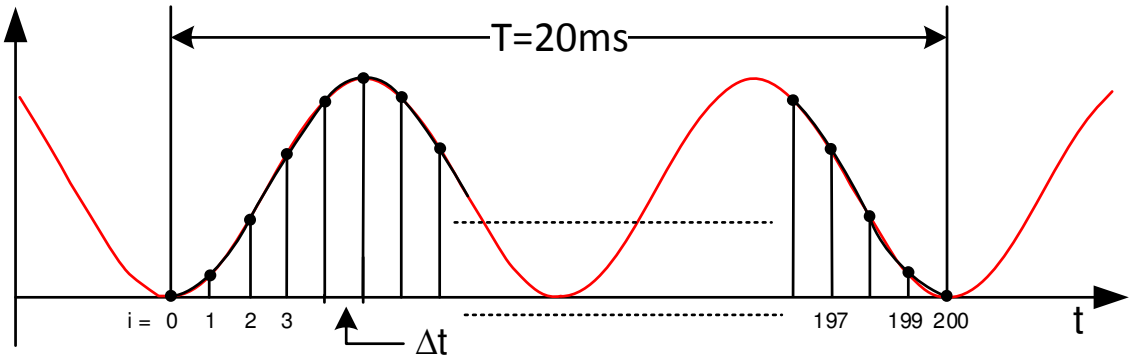

- **Numerical integration algorithm ➔ Simpson Rule**

$$I_{r.m.s.} = \sqrt{\frac{1}{T} \cdot \frac{\Delta t}{3} \cdot \left(i^2[0] + \left(2 \cdot \sum_{i=1}^{(N/2)-1} i^2[2 \cdot i] \right) + \left(4 \cdot \sum_{i=1}^{N/2} i^2[(2 \cdot i) - 1] \right) + i^2[N] \right)}$$

A generic model for fuses to calculate the transients in low-voltage power networks

API001: Phase current $i_A(t)$
BPI001: Phase current $i_B(t)$
CPI001: Phase current $i_C(t)$

Short-Circuit in a LV-Power Network : Phase-Currents $i_{ABC}(t)$

- **3-Phase-to-ground short-circuit ABCG at 80% of the line**
- **Short-circuit current I_{SC} = 2,6kA**

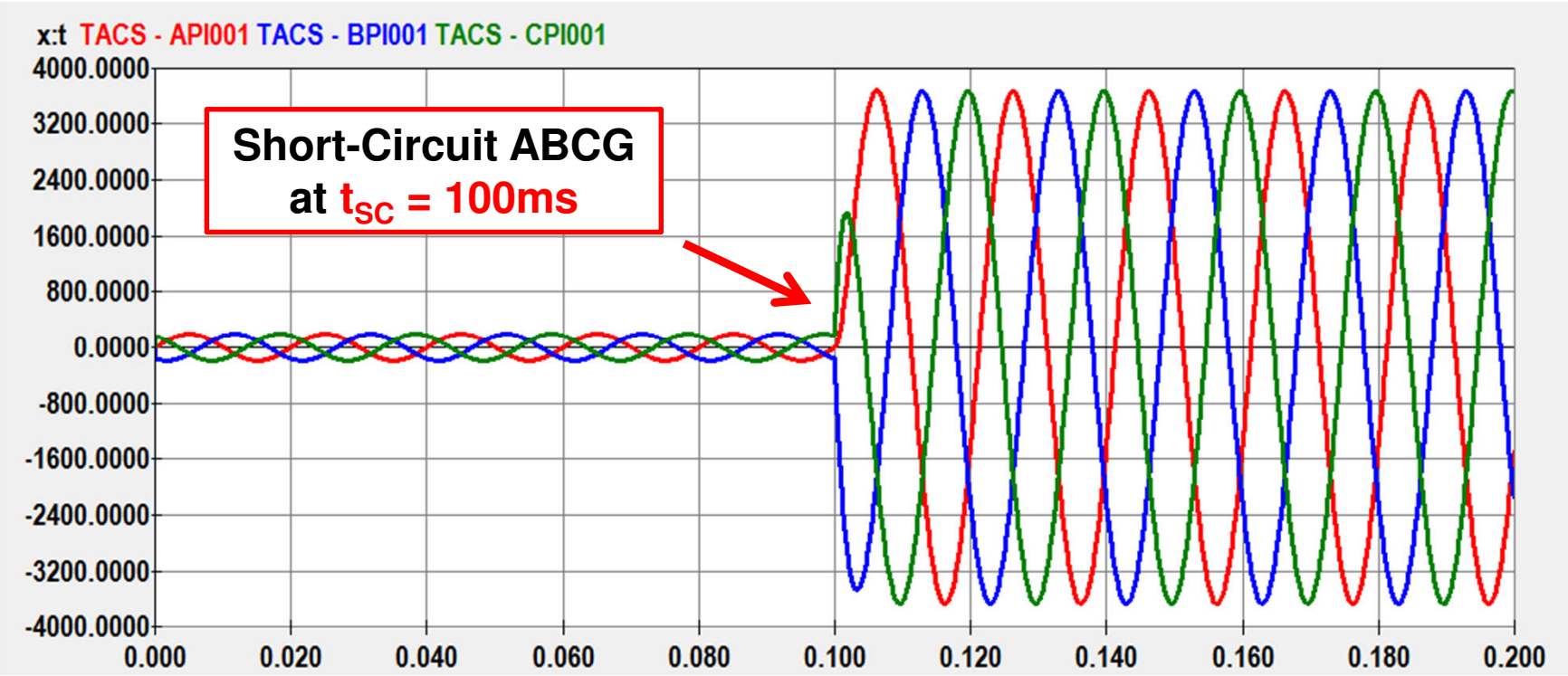

„Small“ decaying DC-Component, typical for LV-power networks

A generic model for fuses to calculate the transients in low-voltage power networks

„Black Box"-Fuse Model from the Power Network Point of View

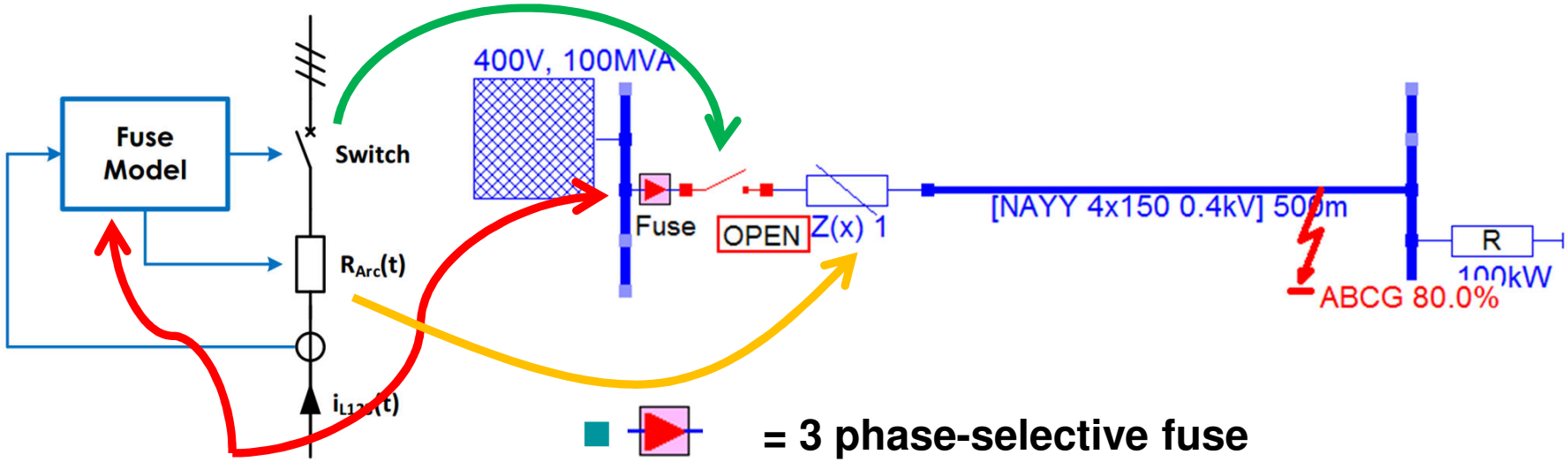

- = 3 phase-selective fuse
- = Switch to interrupt the SC-current
- = Arc resistance $R_{Arc}(t)$

```
EXEC
  CNT:=CNT+1
  if ((CNT mod STEP)=0) then
   CNT:=0
   for i:=0 to (NMAX-1) do
    APIBu[i]:=APIBu[i+1]
    BPIBu[i]:=BPIBu[i+1]
    CPIBu[i]:=CPIBu[i+1]
   endfor
   APIBu[NMAX]:=IL[1]
   BPIBu[NMAX]:=IL[2]
   CPIBu[NMAX]:=IL[3]
   SIL[1..3]:= 0
SIL[1]:=(APIBu[0]**2)+(APIBu[NMAX]**2)
SIL[2]:=(BPIBu[0]**2)+(BPIBu[NMAX]**2)
SIL[3]:=(CPIBu[0]**2)+(CPIBu[NMAX]**2)
```

„Black Box"-Fuse Model

Real-time software implementation using the MODELS programming language of the ATP

A generic model for fuses to calculate the transients in low-voltage power networks

API001: Phase current $i_A(t)$
BPI001: Phase current $i_B(t)$
CPI001: Phase current $i_C(t)$

Short-Circuit in a LV-Power Network : Fuse Currents $i_{ABC}(t)$

- **Interrupting SC-current phase A and B ➔ t_{SC} + 20ms**
- **Interrupting SC-current phase C ➔ t_{SC} + 250ms**

Reduction of SC-current in phase C after SC-interrupting in phases A and B

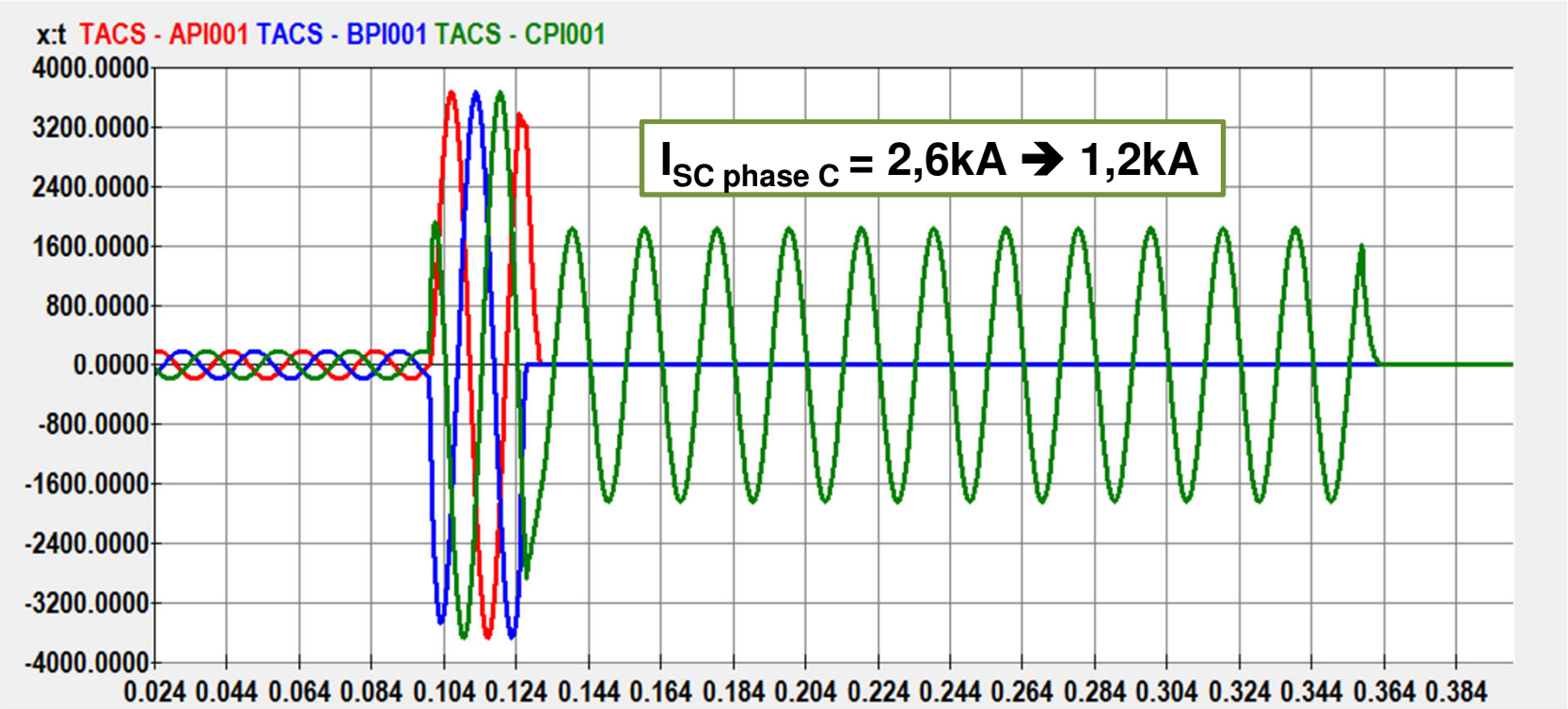

A generic model for fuses to calculate the transients in low-voltage power networks

API001: Phase current $i_A(t)$
BPI001: Phase current $i_B(t)$
CPI001: Phase current $i_C(t)$

Reduction of SC-Current

- **Fault type changes ABCG ➔ ACG ➔ CG**

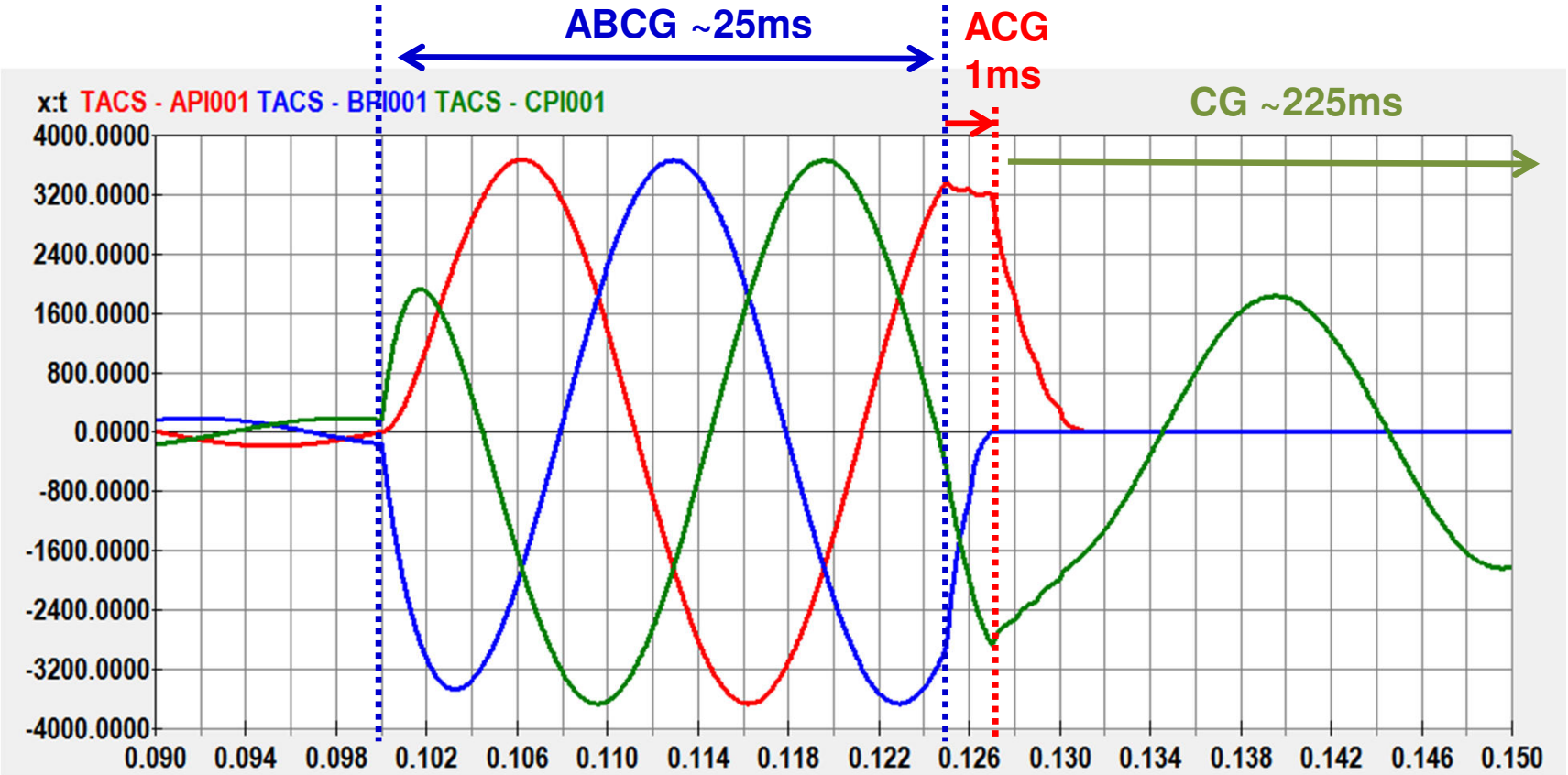

A generic model for fuses to calculate the transients in low-voltage power networks

The Behaviour of the Fuse Model in Phase B

- **Continuous calculation of thermal energy and I^2t-value**

Thermal Energy = I^2t ➔ Starting $R_{Arc}(t)$

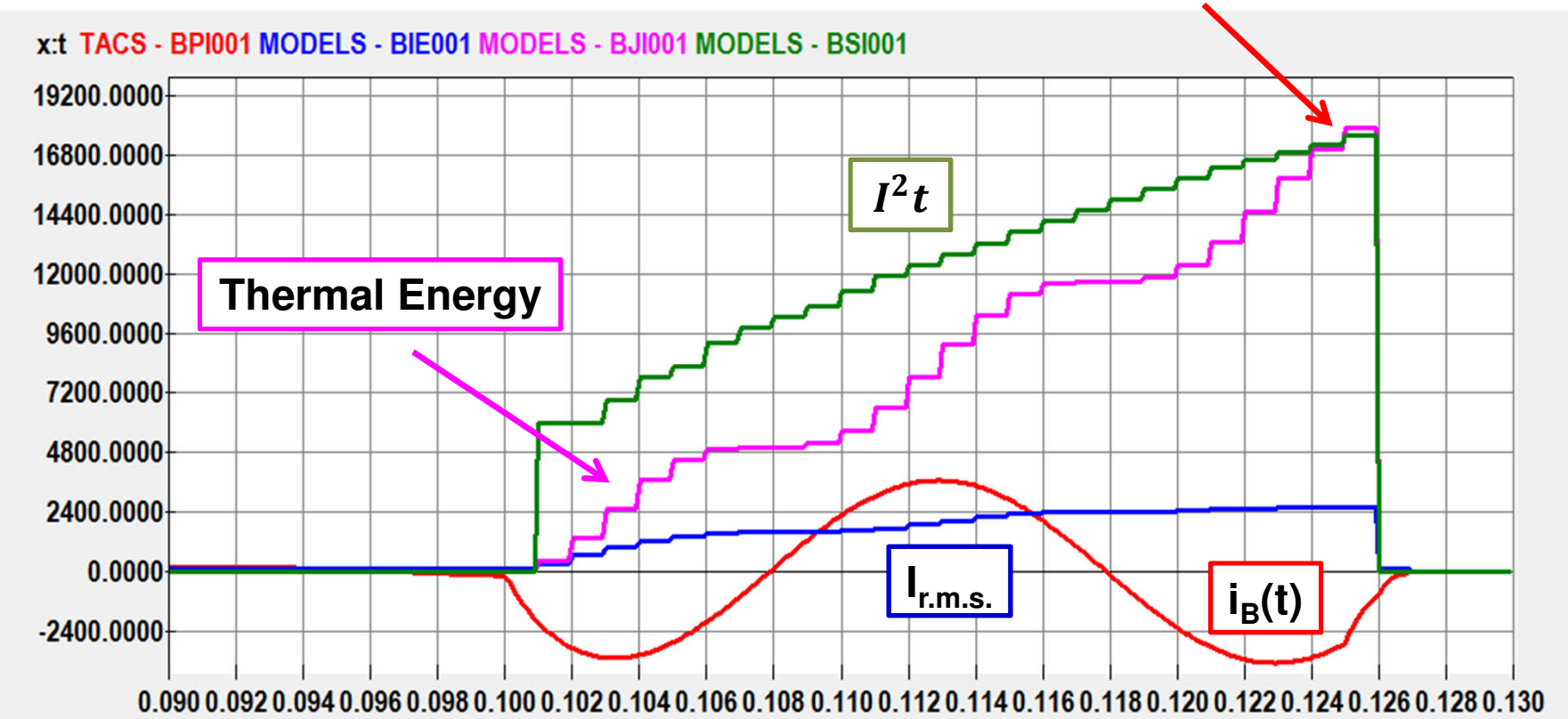

A generic model for fuses to calculate the transients in low-voltage power networks

Considering the Arc Resistance $R_{Arc}(t)$ only using Software

- **Differential equation to simulate the arc resistance $R_{Arc}(t)$**

➡ **More realistic behaviour interrupting SC-current using $R_{Arc}(t)$**

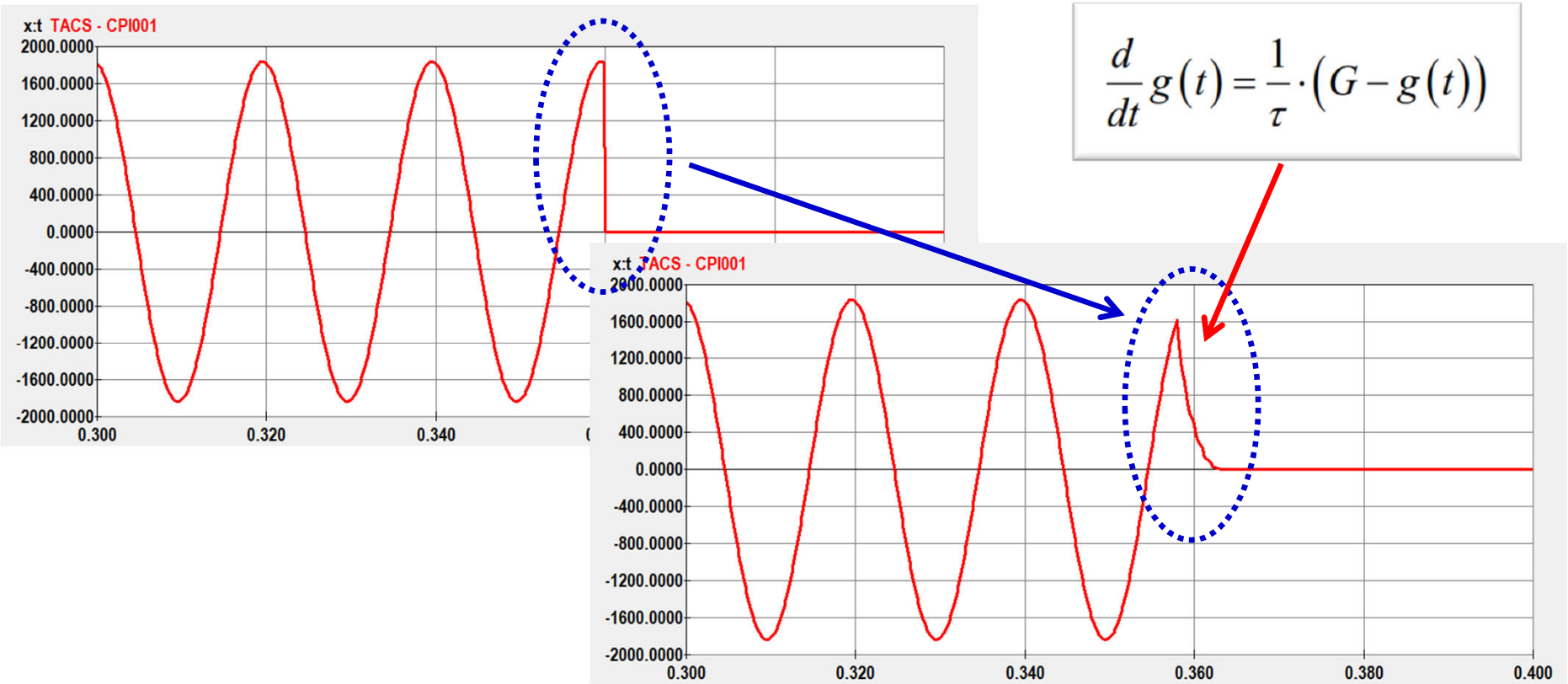

$$\frac{d}{dt}g(t) = \frac{1}{\tau}\cdot\left(G - g(t)\right)$$

A generic model for fuses to calculate the transients in low-voltage power networks

An alternative „Black-Box“ model for a Fuse with Arc Resistance implemented in PowerFactory

- **Based on the implementation using a parallel capacitance and controlled arc resistance $R_L(i)$ [PSG89]**
- **Implemented using PowerFactory DSL Language**

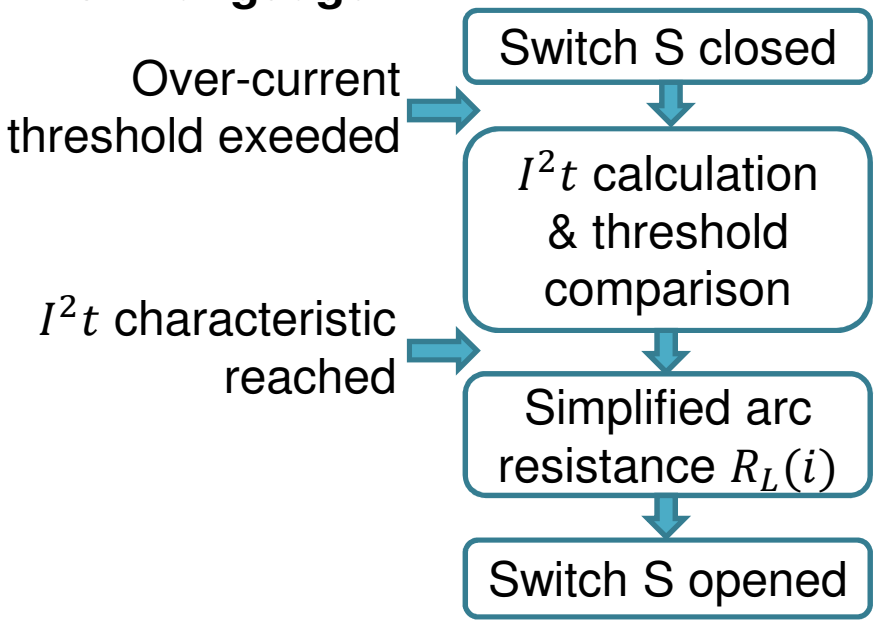

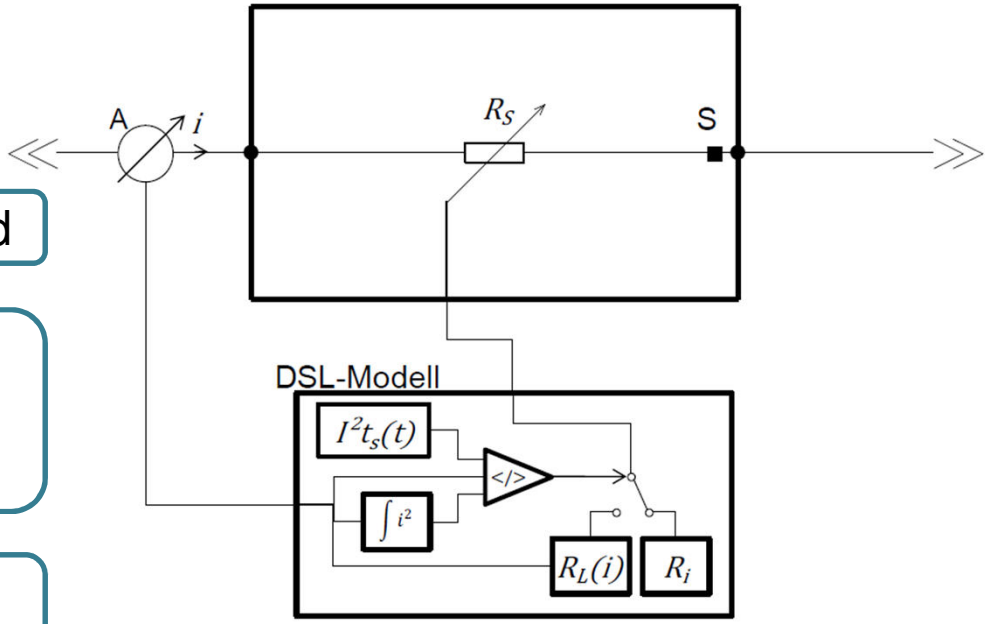

[PSG89] - Petit, Andre; St-Jean, Guy; Fecteau, Gilles: Empirical Model of a Current-Limiting Fuse using EMTP. IEEE Transactions on Power Delivery, Vol. 4, No. 1, New York 1989

A generic model for fuses to calculate the transients in low-voltage power networks

Test Measurements in the IFHT 0,4kV Test Center

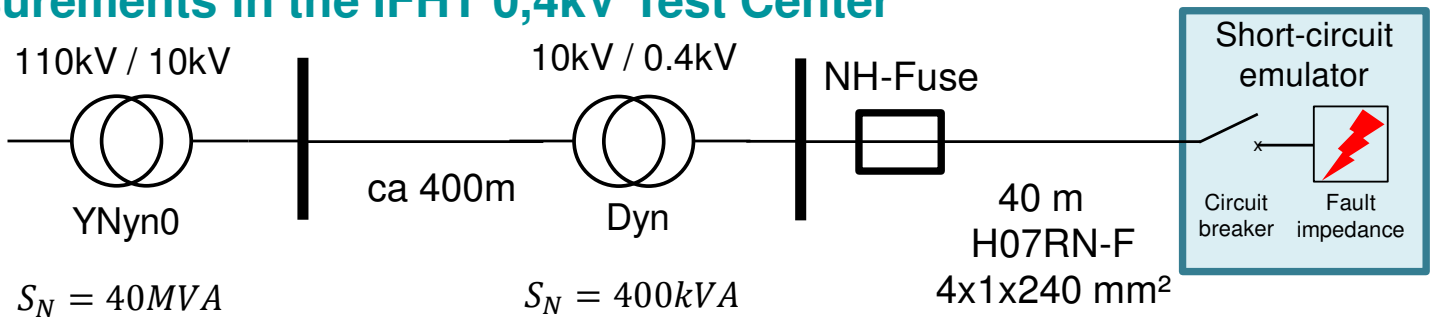

- **Exemplary single line tests of**
  - **100A / 250A NH2 gG fuses**
  - **Different manufacturers / preloadings / ages**
- **Supply**
  - **400kVA, 10kV / 0,4kV Dyn5 transformer**
- **Cable**
  - **40m H07RN-F, 4x1x240mm²**
- **Short circuit**
  - **Short circuit emulator (3 phase / asymmetrical / variable, asymmetrical fault impedance)**
  - **Test-currents: I_k/I_N = 6 / 8 / 10**
- **Measurement**
  - **DEWETRON DEWE-571 Grid-Analyser**

A generic model for fuses to calculate the transients in low-voltage power networks

Test Measurements in the IFHT 0,4kV Test Center

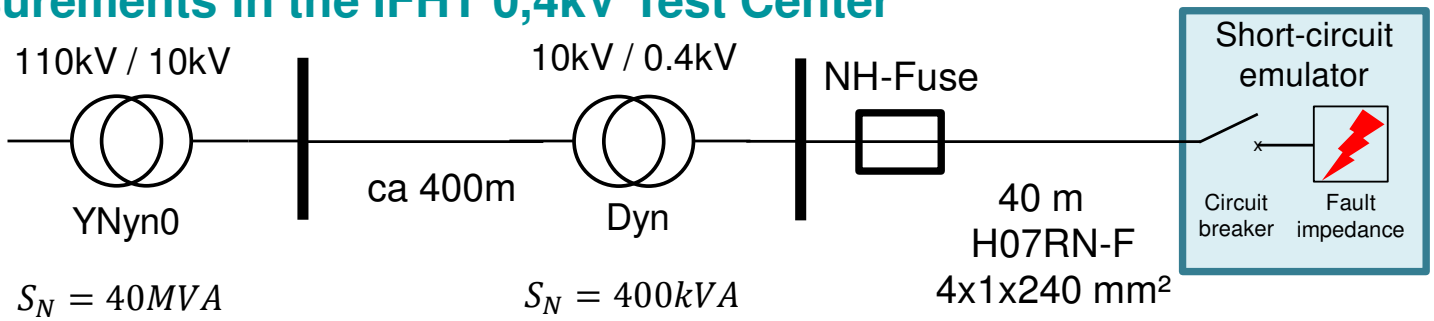

- Exemplary single line tests of

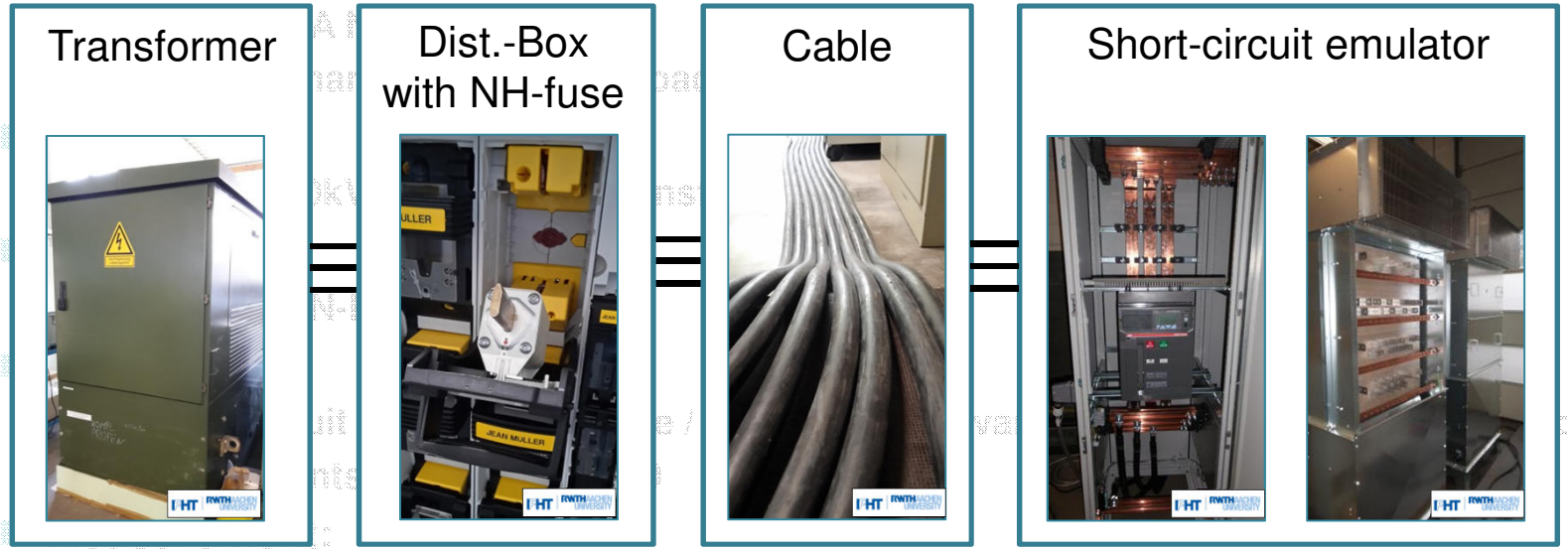

- DEWETRON DEWE-571 Grid-Analyser

A generic model for fuses to calculate the transients in low-voltage power networks

Test measurements in the IFHT 0,4kV Test Center

- **Exemplary result:**
  - **250A NH2 gG fuse**
  - $I_{test} = 10 \cdot I_N = 2500A$
- **Interruption time:**
  - $T_{fuse} = 0,417s$
- **Arcing within the last half-cycle**
  - $V_{Arc} = 120V$

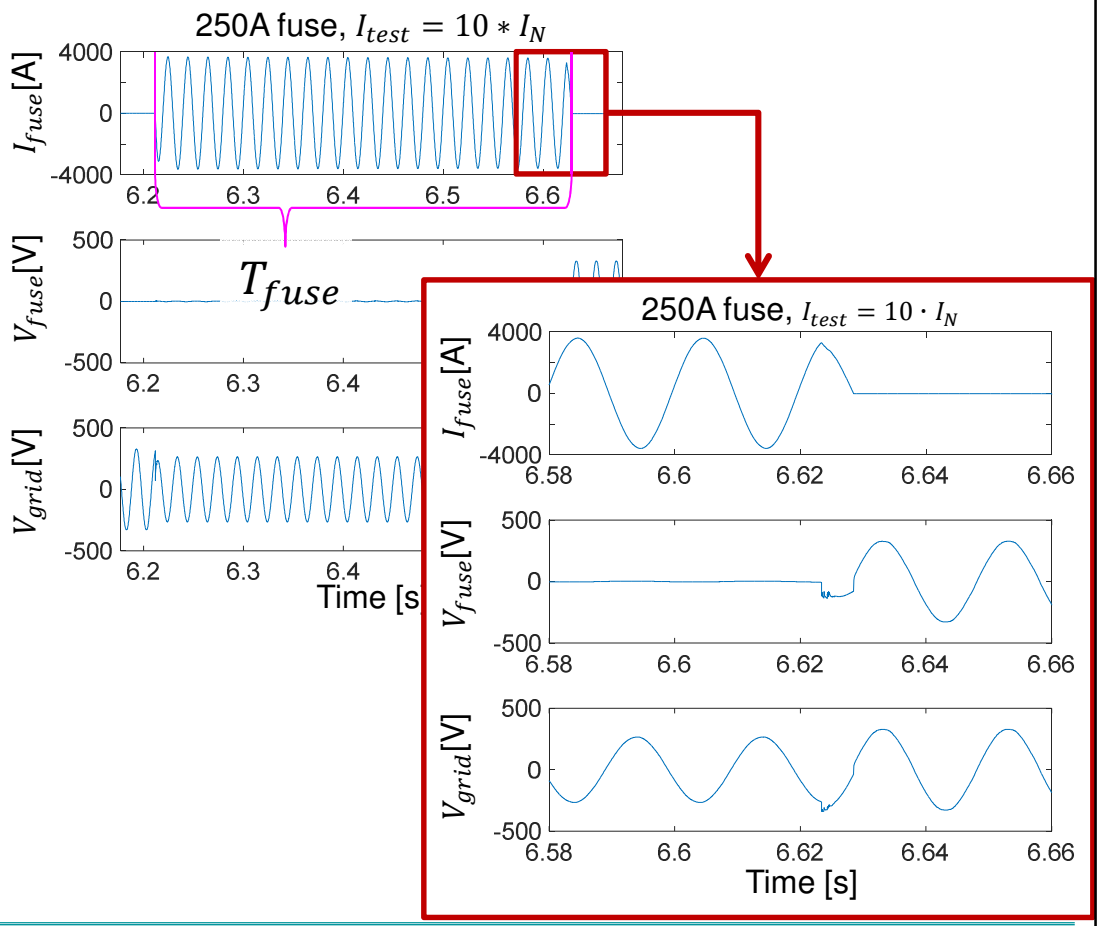

A generic model for fuses to calculate the transients in low-voltage power networks

Test Measurements in the IFHT 0,4kV Test Center

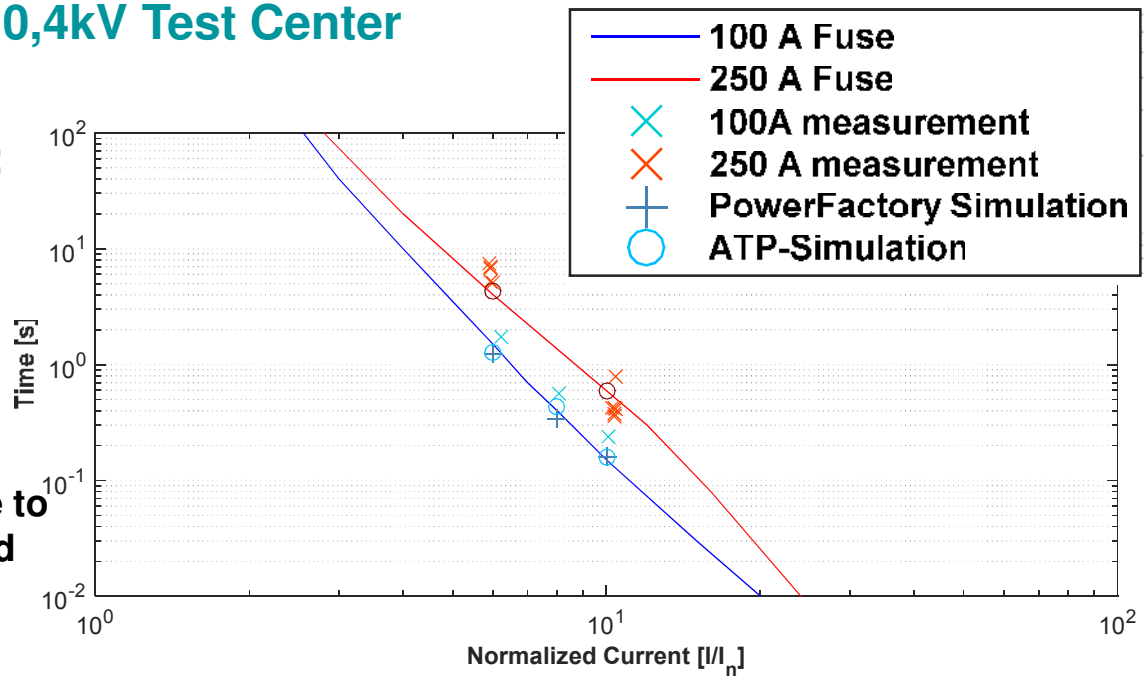

Summary of the test results:

- Variation of the interruption times of up to 15%
- Variation of the maximum arcing voltage
- Possible causes:
  - Drift in the test-current due to heating of the resistive load elements of up to 1,5%
  - Different manufacturers, ages, preloadings, point on wave regarding fault initiation
- Good match of the simulation & current-time-characteristic

Variation of the timing / arcing characteristic necessary

Both models provide the capability for these variations

Thank you for your attention

Prof. Dr.-Ing. Michael Igel; Marc Ames, M.Sc.
PowerEngs, University of Applied Sciences Saarbrücken, Saarland, michael.igel@htwsaar.de

Dipl.-Ing. Felix Glinka; Dipl.-Ing. Tilman Wippenbeck; Philipp Erlinghagen, M.Sc., M.Sc.
IFHT, RWTH Aachen University, Aachen, glinka@ifht.rwth-aachen.de

Supported by:

Federal Ministry
for Economic Affairs
and Energy

on the basis of a decision
by the German Bundestag